This pamphlet is a guide to the most common questions and problems regarding decks. It is not intended nor shall it be considered a complete set of requirements.

Building Permits are required for any deck attached to a structure or any detached deck more than 30 inches above grade.

Application Requirements for a Building Permit

A. **Permit application** must be completed.

B. **Three sets of construction plans. Construction plans shall include the following:**

1. Site drawing (See C).
2. Size of proposed structure.
3. Footing sizes and depth.
4. Floor joist size, direction, and spacing.
5. Post spacing dimension.
6. Beam size.
7. Attachment to house.
8. Post to beam connection.
9. Type of handrail.
10. Guardrail detail.
11. Decking material. (Cedar, *Composite, Treated)
    *Composite decking requires approval

C. **Site drawing** must be submitted by owner or applicant. The following must be indicated:

1. Lot size;
2. Location and dimensions of all existing and proposed buildings on lot (including proposed setbacks);
3. If requested, owner must be able to show corner monuments on the site to the satisfaction of the building inspector.

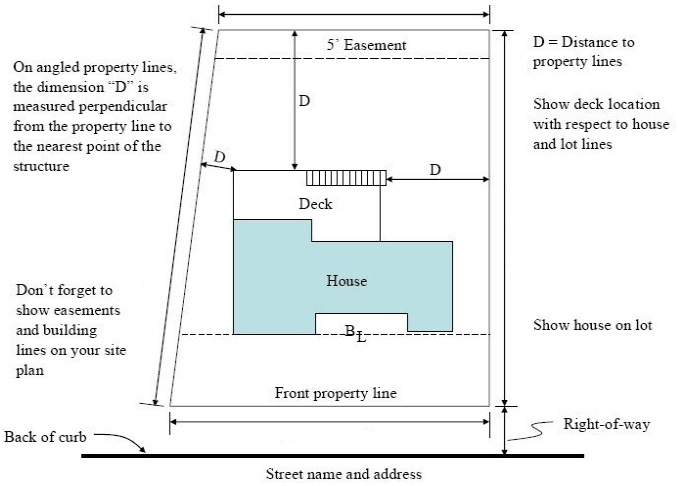

Minimum Setback Requirements Open or uncovered decks shall be at least five feet from side lot lines. (Covered spaces and porches shall be at least ten feet from a side lot line.)

Nails and Screws Fasteners for pressure-preservative and retardant treated wood shall be of one of the following types: hot-dipped zinc coated galvanized steel, stainless steel, silicon bronze or copper.

Wood Required All exposed wood used in the construction of decks is required to be of approved wood of natural resistance to decay (redwood, cedar, etc.) or approved treated wood. This includes post, beams, joists, decking and railings.

Decks Where supported by attachment to an exterior wall, decks shall be sufficiently anchored to the primary structure and designed for both vertical and lateral loads as applicable. Such attachment shall not be accomplished by the use of toenails or nails subject to withdrawal. Where connection to the primary building structure cannot be verified during inspection, decks shall be self-supporting.

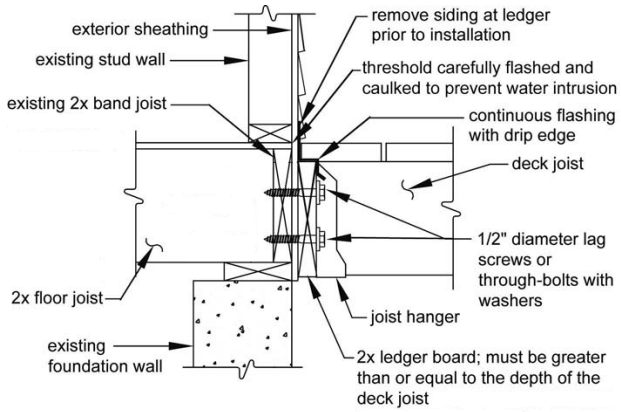

Ledger Board Fastener Spacing Table

Joist Span	6'	6'-8'	8'-10'	10'-12'	12'-14'	14'-16'	16'-18'
Connection Details	On center spacing of fasteners in inches						
½" diameter lag screw	30"	23"	18"	15"	13"	11"	10"
½" diameter bolt	36"	36"	34"	29"	24"	21"	19"
½" diameter bolt on ½" washers	36"	36"	29"	24"	21"	18"	16"

The tip of the lag screw shall fully extend beyond the inside face of the band joist.
Ledger board shall be flashed to prevent water from contacting the house band joist.
Ledger board shall be minimum 2x8" No.2 grade or better.
Ledger board supporting loads shall be uniform.
See ledger board detail on next page.

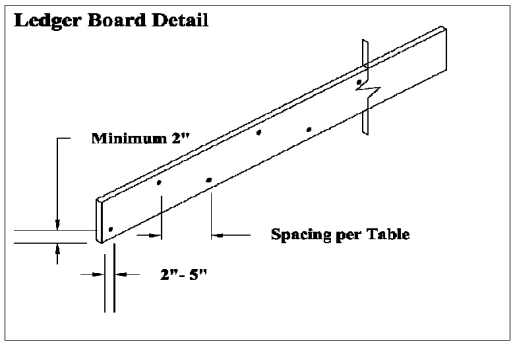

Flashing All connections between deck and dwelling shall be weatherproof. Any cuts in exterior finish shall be flashed.

Frost Footings Required for any deck attached to a dwelling, porch or garage that has frost footings. The minimum depth to the base of the footing is 42 inches from grade. Use Beam and Footing Size chart to determine required footing diameter on page four.

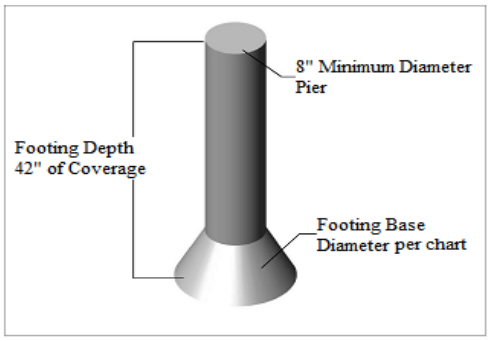

Beam Construction The beam shall be two 2 inch nominal pieces of lumber. Nail the beam together using 10d-16d nails 12" inches on center staggered top and bottom. Use Beam and Footing Size chart to determine required beam size on page four.

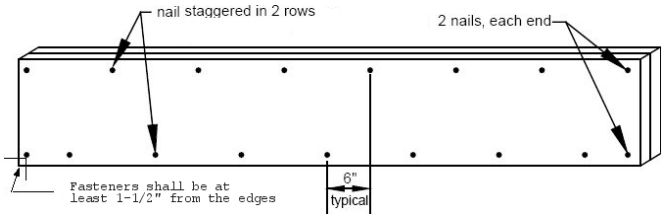

Cantilevered wall construction Deck ledger shall not be supported on cantilevered joist or trusses without engineered design. Frame around cantilevered joists.

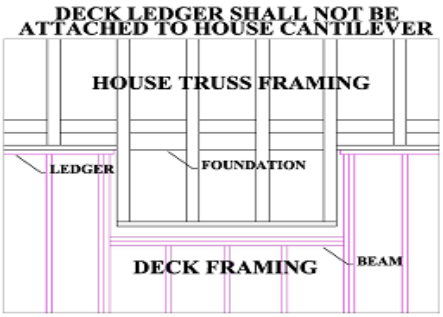

Post to Beam Connection Beam shall have full bearing on post below, attached with bolts or manufactured hardware.

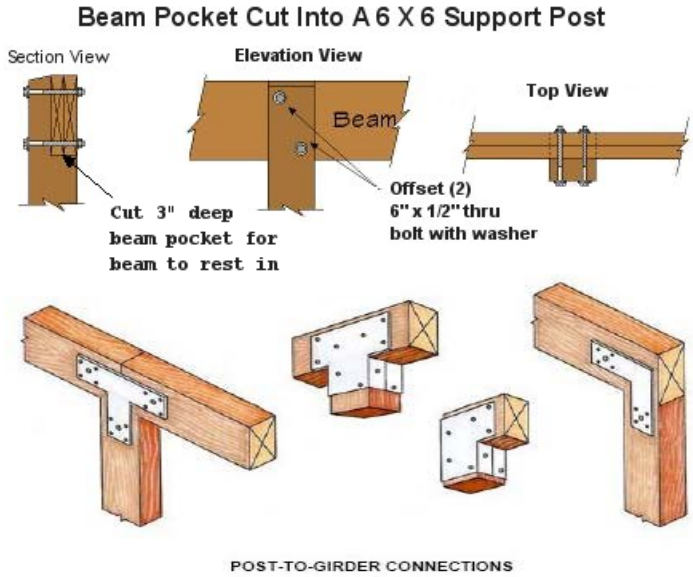

Framing Details Header beams and joists that frame into ledgers or beams shall be supported by approved framing and anchors such as joist hangers. Joist hangers shall not be modified without manufacturer's approval. Use inverted flange hanger if you want joist flush at end of ledger board.

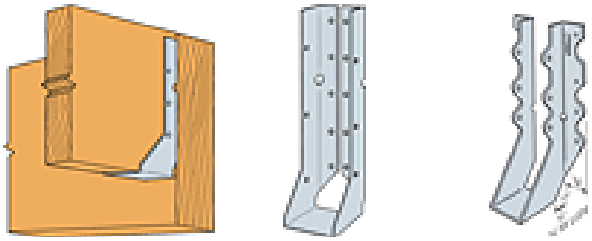

Joist Span
Based on No. 2 or better wood grades.
(Design Load = 40#LL+10#DL, Deflections=L/360)

	Ponderosa Pine		Southern Pine		Western Cedar	
	12" OC	16" OC	12" OC	16" OC	12" OC	16" OC
2X6	9'-2"	8'-4"	10'-9"	9'-9"	9'-2"	8'-4"
2X8	12'-1"	10'-10"	14'-2"	12'-10"	12'-1"	11'-0"
2X10	15'-4"	13'-3"	18'-0"	16'-1"	15'-5"	13'-9"
2X12	17'-9"	15'-5"	21'-9"	19'-0"	18'-5"	16'-0"

Joist Cantilever Joists shall not overhang beams by more than the dimension specified on this table. Cantilevered joists shall have solid blocking above beam. Beams shall not overhang posts by more than one foot unless a special design is approved.

Member Size	Spacing	Maximum Cantilever Span (uplift Force at Back span Support in lbs.)	
		Ground Snow Load	
		50 psf	70 psf
2 x 8	12”	39” (156lbs)	34” (165lbs)
2 x 8	16”	34” (151lbs)	29” (180lbs)
2 x 10	12”	57” (189lbs)	49” (201lbs)
2 x 10	16”	49” (208lbs)	42” (220lbs)
2 x 10	24”	40” (241lbs)	34” (255lbs)
2 x 12	16”	67” (260lbs)	57” (268lbs)
2 x 12	24”	54” (319lbs)	47” (330lbs)

Stairs Minimum width is 36 inches. Maximum rise is 7 3/4 inches. Minimum run is 10 inches with .75”- 1.25” nosing. Largest tread width or riser height shall not exceed the smallest by more than 3/8”. Minimum run for stairs without nosing shall be 11” or greater.

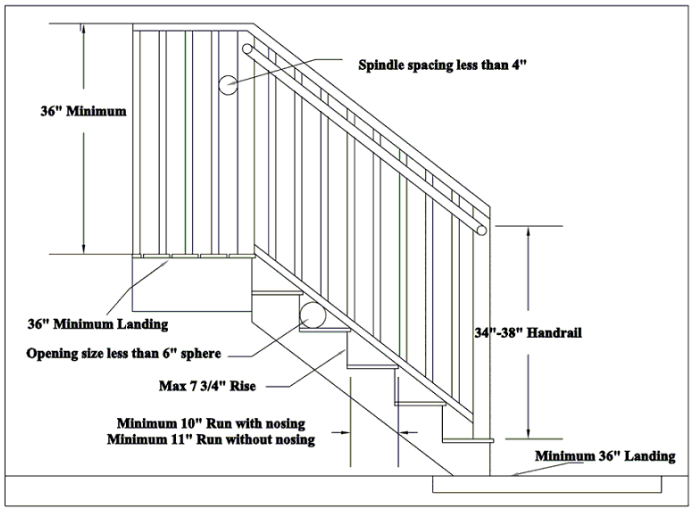

Guards Required on all decks more than 30 inches above grade. Rail must be 36 inches minimum in height. Open guards and stair railings must have intermediate rails or an ornamental pattern that a 4-inch sphere cannot pass through. **Exception:** The triangular opening formed by the riser, tread and bottom element of a guard may be sized so that a 6-inch sphere cannot pass through. Open sides of stairs with a total rise of more than 30” above the grade shall have guards not less than 34” in height measured vertically from the nosing of the treads. Openings for required guards on the sides of stair treads shall not allow a sphere 4 3/8” to pass through.

Handrails The top shall be placed not less than 34 inches or more than 38 inches above the nosing of the treads. Stairways having four or more risers shall have at least one handrail. Handrail ends shall be returned or terminated in posts. All required handrails shall be of the following types or provide equivalent graspability.
Type 1: Handrails with a circular cross section shall have an outside diameter of at least 1 ¼ inches and not greater than 2 inches. If the handrail is not circular, it shall have a perimeter dimension of at least 4 inches and not greater than 6 ¼ inches with a maximum cross section dimension of 2 ¼ inches.
Type 2: Handrails with a perimeter greater than 6 ¼ inches shall provide a graspable finger recess area on both sides of the profile. The finger recess shall begin within a distance of ¾ inch measured vertically from the tallest portion of the profile and achieve a depth of at least 5/16 inch within 7/8 inch below the widest portion of the profile. This required depth shall continue for at least 3/8 inch to a level that is not less than 1 ¾ inches below the tallest portion of the profile. The minimum width of the handrail above the recess shall be 1 ¼ inches to a maximum of 2 ¾ inches. Edges shall have a minimum radius of 0.01 inch.

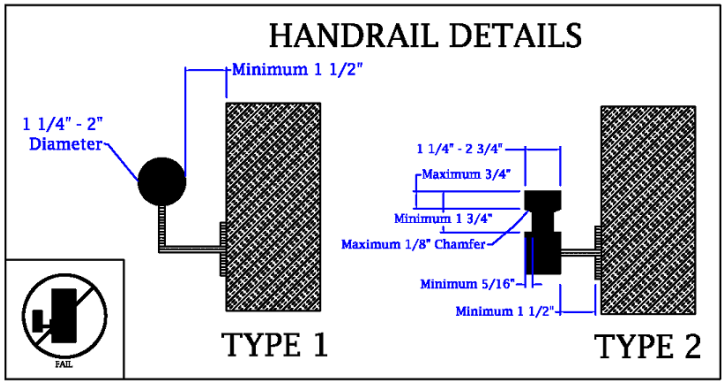

Windows Safety glazing may be required depending on deck design and layout. If your window is less than 60” above stairs or landings, safety glazing is required. Windows larger than 9’ square feet closer than 18” to deck floor are also required to be safety glazed. Windows closer than 24” to doors shall be safety glazed.

Electrical Requirement
Electrical service line over or within 3’ horizontally of the deck or stairs must have a minimum 10’ vertical clearance.

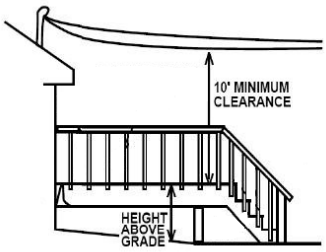

Special Design Note Most deck designs or locations may not be appropriate for putting a screen porch or 3-season porch on the deck platform. The city requires larger setbacks and stronger construction for porches. Call the building inspection department if you have any questions.

BEAM AND FOOTING SIZES

Based on No. 2 or better Ponderosa Pine and Southern Pine (Treated for weather and/or ground exposure)

Joist Length		Post Spacing 4'	5'	6'	7'	8'	9'	10'	11'	12'	13'	14'
6'	Southern Pine Beam	1-2x6	1-2x6	1-2x6	2-2x6	2-2x6	2-2x6	2-2x8	2-2x8	2-2x10	2-2x10	2-2x10
	Ponderosa Pine Beam	1-2x6	1-2x6	1-2x8	2-2x8	2-2x8	2-2x8	2-2x10	2-2x10	2-2x12	2-2x12	3-2x10
	Corner Footing	6 5 4	7 6 5	7 6 5	8 7 6	9 7 6	9 7 6	10 8 7	10 8 7	10 9 7	11 9 8	11 9 8
	Intermediate Footing	9 8 7	10 8 7	10 9 7	11 9 8	12 10 9	13 10 9	14 11 10	14 12 10	15 12 10	15 13 11	16 13 11
7'	Southern Pine Beam	1-2x6	1-2x6	1-2x6	2-2x6	2-2x6	2-2x8	2-2x8	2-2x10	2-2x10	2-2x10	2-2x12
	Ponderosa Pine Beam	1-2x6	1-2x6	1-2x8	2-2x8	2-2x8	2-2x10	2-2x10	2-2x10	2-2x12	3-2x10	3-2x10
	Corner Footing	7 5 5	7 6 5	8 7 6	9 7 6	9 8 7	10 8 7	10 8 7	11 9 8	11 9 8	12 10 9	12 10 9
	Intermediate Footing	9 8 7	10 8 7	11 9 8	12 10 9	13 11 9	14 11 10	14 12 10	15 13 11	16 13 11	17 14 12	17 14 12
8'	Southern Pine Beam	1-2x6	1-2x6	2-2x6	2-2x6	2-2x8	2-2x8	2-2x8	2-2x10	2-2x10	2-2x12	2-2x12
	Ponderosa Pine Beam	1-2x6	2-2x6	2-2x8	2-2x8	2-2x8	2-2x10	2-2x10	2-2x10	3-2x10	3-2x10	3-2x12
	Corner Footing	7 6 5	8 6 6	9 7 6	9 8 7	10 8 7	10 8 7	11 9 8	11 9 8	12 10 9	13 10 9	13 11 9
	Intermediate Footing	10 8 7	11 9 8	12 10 9	13 11 9	14 11 10	15 12 10	16 13 11	16 13 12	17 14 12	18 15 13	18 15 13
9'	Southern Pine Beam	1-2x6	1-2x6	2-2x6	2-2x6	2-2x8	2-2x8	2-2x10	2-2x10	2-2x12	2-2x12	3-2x10
	Ponderosa Pine Beam	1-2x6	2-2x6	2-2x8	2-2x8	2-2x10	2-2x10	2-2x10	3-2x10	3-2x10	3-2x12	3-2x12
	Corner Footing	7 6 5	8 7 6	9 7 6	10 8 7	10 9 7	11 9 8	12 10 8	12 10 9	13 10 9	13 11 9	14 11 10
	Intermediate Footing	10 9 7	12 10 8	13 10 9	14 11 10	15 12 10	16 13 11	17 14 12	17 14 12	18 15 13	19 15 13	20 16 14
10'	Southern Pine Beam	1-2x6	1-2x6	2-2x6	2-2x6	2-2x8	2-2x8	2-2x10	2-2x12	2-2x12	3-2x10	3-2x10
	Ponderosa Pine Beam	1-2x6	1-2x6	2-2x8	2-2x8	2-2x10	2-2x10	2-2x12	3-2x10	3-2x12	3-2x12	Eng Bm
	Corner Footing	8 6 6	9 7 6	10 8 7	10 8 7	11 9 8	12 10 8	12 10 9	13 11 9	14 11 10	14 12 10	15 12 10
	Intermediate Footing	11 9 8	12 10 9	14 11 10	15 12 10	16 13 11	17 14 12	17 14 12	18 15 13	19 16 14	20 16 14	21 17 15
11'	Southern Pine Beam	1-2x6	2-2x6	2-2x6	2-2x8	2-2x8	2-2x10	2-2x10	2-2x12	2-2x12	3-2x10	3-2x12
	Ponderosa Pine Beam	2-2x6	2-2x6	2-2x8	2-2x8	2-2x10	2-2x12	2-2x12	3-2x10	3-2x12	3-2x12	Eng Bm
	Corner Footing	8 7 6	9 7 6	10 8 7	11 9 8	12 9 8	12 10 9	13 11 9	14 11 10	14 12 10	15 12 10	15 13 11
	Intermediate Footing	12 9 8	13 11 9	14 12 10	15 12 10	16 13 11	17 14 12	17 14 12	18 15 13	19 16 14	20 16 14	21 17 15
12'	Southern Pine Beam	1-2x6	2-2x6	2-2x6	2-2x8	2-2x8	2-2x10	2-2x10	2-2x12	3-2x10	3-2x10	3-2x12
	Ponderosa Pine Beam	2-2x6	2-2x6	2-2x8	2-2x10	2-2x10	2-2x12	2-2x12	3-2x12	3-2x12	Eng Bm	Eng Bm
	Corner Footing	9 7 6	10 8 7	10 9 7	11 9 8	12 10 9	13 10 9	14 11 10	14 12 10	15 12 10	15 13 11	16 13 11
	Intermediate Footing	12 10 9	14 11 10	15 12 10	16 13 11	17 14 12	18 15 13	19 16 14	20 16 14	21 17 15	22 18 15	23 18 16
13'	Southern Pine Beam	1-2x6	2-2x6	2-2x6	2-2x8	2-2x8	2-2x10	2-2x10	2-2x12	3-2x10	3-2x12	3-2x12
	Ponderosa Pine Beam	2-2x6	2-2x6	2-2x8	2-2x10	2-2x12	2-2x12	2-2x12	3-2x12	3-2x12	Eng Bm	Eng Bm
	Corner Footing	9 7 6	10 8 7	11 9 8	12 10 8	13 10 9	13 11 9	14 12 10	15 12 10	15 13 11	16 13 11	17 14 12
	Intermediate Footing	13 10 9	14 12 10	15 13 11	17 14 12	18 15 13	19 15 13	20 16 14	21 17 15	22 18 15	23 19 16	24 19 17
14'	Southern Pine Beam	1-2x6	2-2x6	2-2x6	2-2x8	2-2x10	2-2x10	2-2x12	3-2x10	3-2x12	3-2x12	3-2x12
	Ponderosa Pine Beam	2-2x6	2-2x8	2-2x8	2-2x10	2-2x12	3-2x10	3-2x12	3-2x12	Eng Bm	Eng Bm	Eng Bm
	Corner Footing	9 8 7	10 8 7	11 9 8	12 10 9	13 11 9	14 11 10	15 12 10	15 13 11	16 13 11	17 14 12	17 14 12
	Intermediate Footing	13 11 9	15 12 10	16 13 11	17 14 12	18 15 13	20 16 14	21 17 15	22 18 15	23 18 16	24 19 17	24 20 17
15'	Southern Pine Beam	2-2x6	2-2x6	2-2x8	2-2x8	2-2x10	2-2x12	2-2x12	3-2x10	3-2x12	3-2x12	Eng Bm
	Ponderosa Pine Beam	2-2x6	2-2x8	2-2x8	2-2x10	3-2x10	3-2x10	3-2x12	3-2x12	Eng Bm	Eng Bm	Eng Bm
	Corner Footing	10 8 7	11 9 8	12 10 8	13 10 9	14 11 10	14 12 10	15 12 11	16 13 11	17 14 12	17 14 12	18 15 13
	Intermediate Footing	14 11 10	15 12 11	17 14 12	18 15 13	19 16 14	20 17 14	21 17 15	22 18 16	23 19 17	24 20 17	25 21 18
16'	Southern Pine Beam	2-2x6	2-2x6	2-2x8	2-2x8	2-2x10	2-2x12	2-2x12	3-2x10	3-2x12	3-2x12	Eng Bm
	Ponderosa Pine Beam	2-2x6	2-2x8	2-2x10	2-2x10	3-2x10	3-2x10	3-2x12	3-2x12	Eng Bm	Eng Bm	Eng Bm
	Corner Footing	10 8 7	11 9 8	12 10 9	13 11 9	14 11 10	15 12 10	16 13 11	16 13 12	17 14 12	18 15 13	18 15 13
	Intermediate Footing	14 11 10	16 13 11	17 14 12	18 15 13	20 16 14	21 17 15	22 18 16	23 19 16	24 20 17	25 21 18	26 21 18

Notes:

1. Joist length is total length of joist, including any cantilevers.
2. When joist extends (cantilevers) beyond support beam by 18" or more, add 1" to footing dimensions shown.
3. 3-season porches or screen porches require larger footings and beams contact building department.
4. All footing sizes above are base diameter (in inches) and are listed for THREE SOIL TYPES:

	CLAY	SAND	GRAVEL
Corner Footing	10	8	7
Intermediate Footing	14	11	10